Motion and Presence Detector - Professional Line

IS 3360

PF - surface, rd.
EAN 4007841 033477
Article number 033477
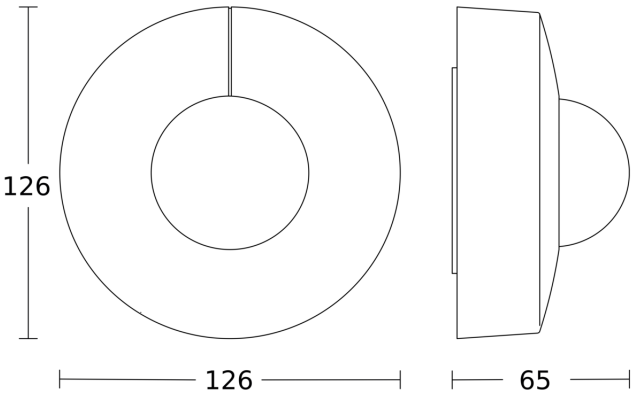
Dimension Drawing